37.Front Differential Assembly

A: REMOVAL

1) Remove the transmission assembly from vehicle body. <Ref. to 4AT-37, REMOVAL, Automatic Transmission Assembly.>
2) Pull out the torque converter clutch assembly. <Ref. to 4AT-69, REMOVAL, Torque Converter Clutch Assembly.>
3) Remove the input shaft.

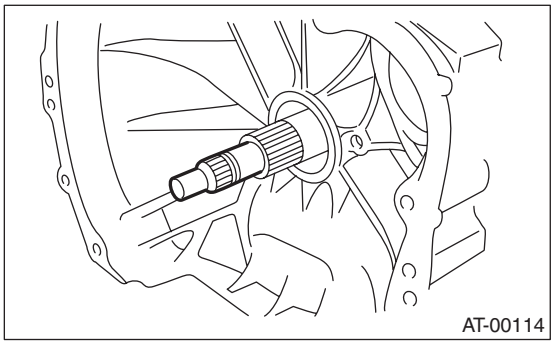

4) Lift up the lever on the rear side of transmission harness connector, and then disconnect it from the stay.
5) Disconnect the inhibitor switch from the stay.
6) Remove the oil charge pipe. <Ref. to 4AT-68, REMOVAL, Oil Charge Pipe.>
7) Remove the oil cooler inlet and outlet pipes. <Ref. to 4AT-65, REMOVAL, ATF Cooler Pipe and Hose.>
8) Separate the converter case from the transmission case. <Ref. to 4AT-88, REMOVAL, Converter Case.>
9) Remove the seal pipe.
10) Remove the differential side retainers using ST.

NOTE:
Hold the differential case assembly by hand to avoid damaging the retainer mounting hole of the converter case.
ST 499787000 WRENCH ASSY
11) Remove the differential assembly while being careful not to damage the attachment part of retainer.

B: INSTALLATION

1) Install the differential assembly to the torque converter clutch case.

NOTE:
Do not damage the inside of the torque converter clutch case (particularly the mating surface of the differential side retainer).

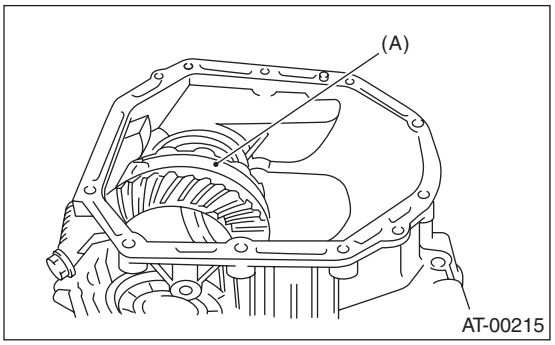

(A) Differential ASSY

2) Install the O-ring to left and right side retainer.
3) Using the ST, install the side retainer. <Ref. to 4AT-102, REMOVAL, Front Differential Assembly.>
ST 499787000 WRENCH ASSY
4) Adjust the backlash of the front differential. <Ref. to 4AT-106, ADJUSTMENT, Front Differential Assembly.>
5) Install the lock plate.

Tightening torque:
25 N·m (2.5 kgf-m, 18.4 ft-lb)

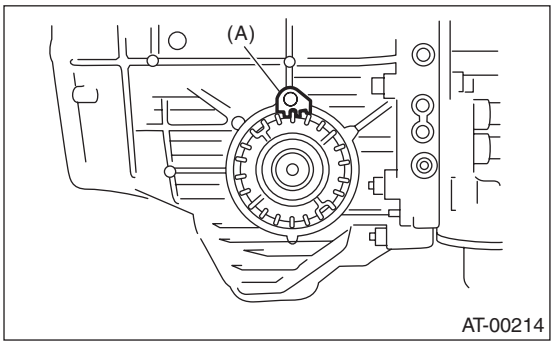

(A) Lock plate

6) Install new seal pipe to converter case.

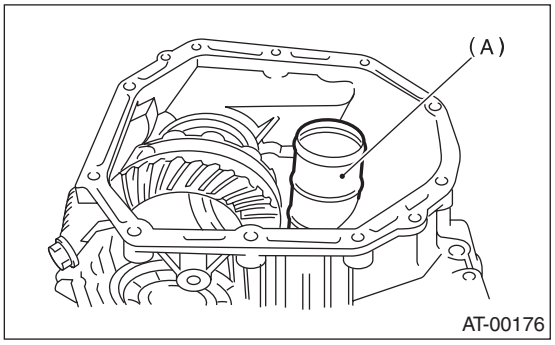

(A) Seal pipe

7) Install the converter case to the transmission case. <Ref. to 4AT-88, INSTALLATION, Converter Case.>
8) Insert the inhibitor switch and transmission connector to the stay.

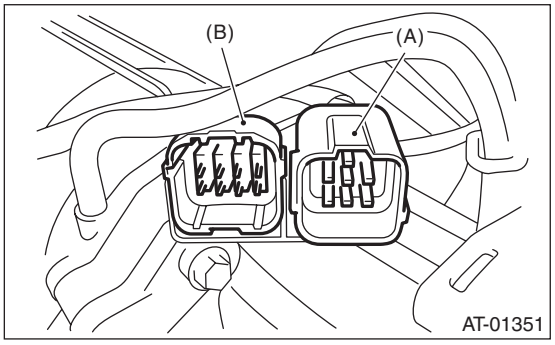

(A) Transmission harness
(B) Inhibitor switch harness

9) Install the oil cooler pipe. <Ref. to 4AT-66, INSTALLATION, ATF Cooler Pipe and Hose.>
10) Install the oil charge pipe together with an O-ring. <Ref. to 4AT-68, INSTALLATION, Oil Charge Pipe.>
11) Insert the input shaft, and check the amount of protrusion.

NOTE:
Turn the input shaft lightly by hand while inserting.

Normal protrusion amount A:
50 — 55 mm (1.97 — 2.17 in)

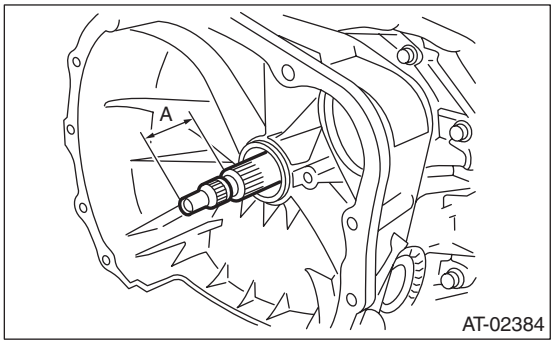

12) Install the torque converter clutch assembly. <Ref. to 4AT-69, INSTALLATION, Torque Converter Clutch Assembly.>
13) Install the transmission assembly to the vehicle. <Ref. to 4AT-39, INSTALLATION, Automatic Transmission Assembly.>

C: DISASSEMBLY

1. DIFFERENTIAL CASE ASSEMBLY

1) Remove the taper roller bearing using the ST and a press.
ST 498077000 REMOVER

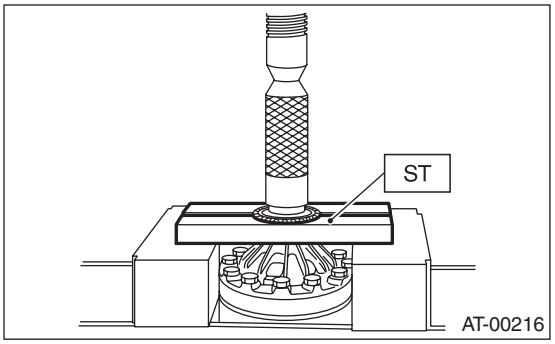

2) Secure the case in a vise, remove the hypoid driven gear tightening bolts, and then separate the hypoid driven gear into case (RH) and case (LH).

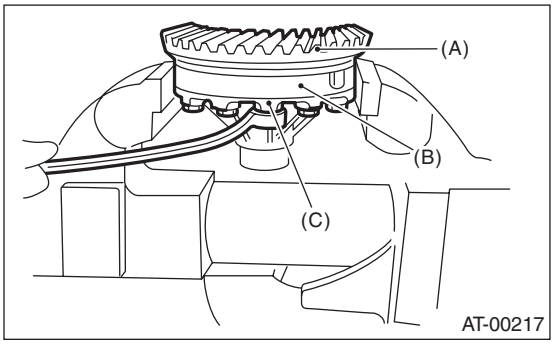

(A) Hypoid driven gear
(B) Differential case (RH)
(C) Differential case (LH)

3) Pull out the straight pin and shaft, and then remove the differential bevel gear, washer and differential bevel pinion.

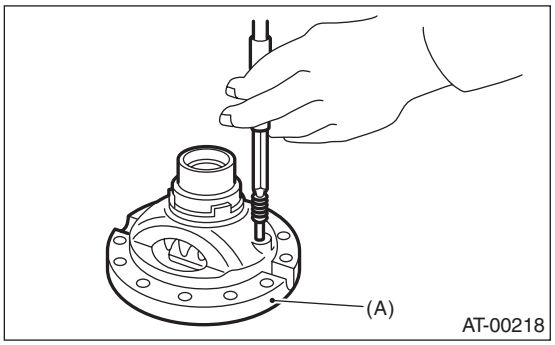

(A) Differential case (RH)

2. SIDE RETAINER

NOTE:
After adjusting the drive pinion backlash and tooth contact, remove and install the oil seal and O-ring.

1) Remove the O-ring.

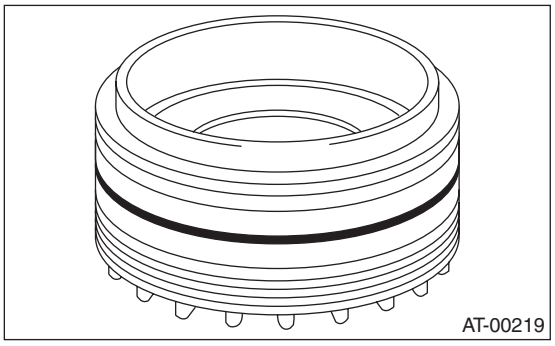

2) Remove the oil seal.

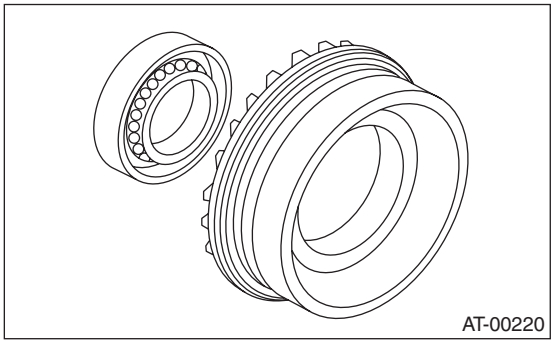

3) Remove the split pin, and then remove the claw.
ST 398527700 PULLER ASSY

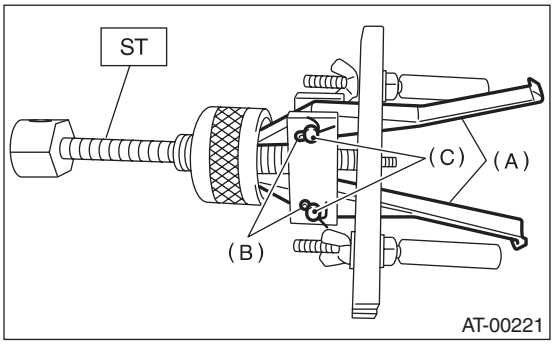

(A) Claw
(B) Split pin
(C) Pin

4) Attach two claws to the outer race, and set the ST to side retainer.
ST 398527700 PULLER ASSY

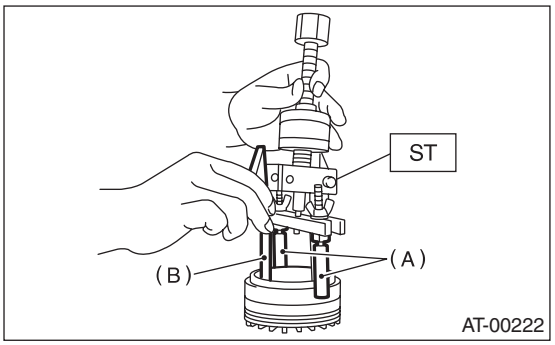

(A) Shaft
(B) Claw

5) Restore the removed claws to original position, and install the pin and split pin.
6) Hold the shaft of ST to avoid removing from side retainer, and then remove the bearing outer race.
ST 398527700 PULLER ASSY

NOTE:
Replace the bearing inner and outer races as a single unit.

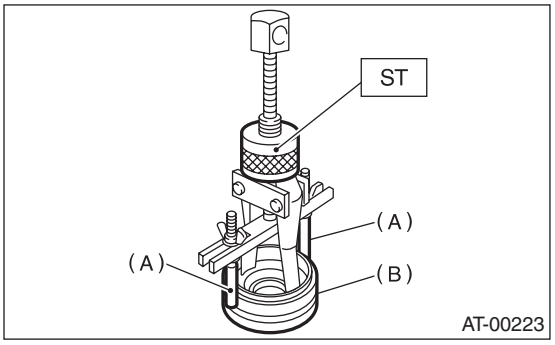

(A) Shaft
(B) Side retainer

D: ASSEMBLY

1. DIFFERENTIAL CASE ASSEMBLY

1) Install the washer, differential bevel gear and differential bevel pinion in the differential case (RH). Insert the pinion shaft.
2) Attach the straight pin in the reverse direction.

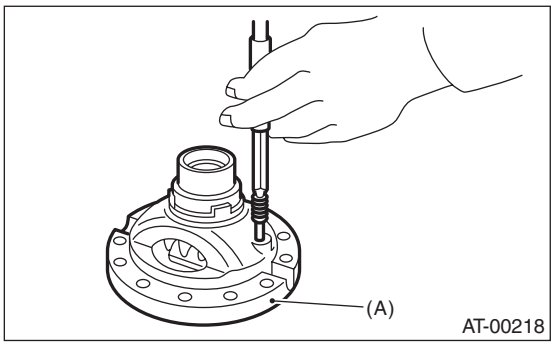

(A) Differential case (RH)

3) Install the washer and differential bevel gear to the differential case (LH). Put the differential case (RH) on the case, and assemble two cases.
4) Install the hypoid driven gear and secure by tightening the bolt.

Tightening torque:
62 N·m (6.3 kgf-m, 45.7 ft-lb)

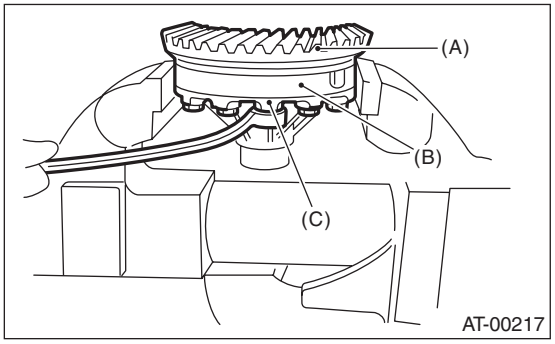

(A) Hypoid driven gear
(B) Differential case (RH)
(C) Differential case (LH)

5) Measurement of backlash (Selection of washer)
(1) Install the genuine axle shaft to differential case.

Part No. 38415AA070 Axle Shaft

(2) Measure the gear backlash using ST1 and ST2, and then insert the ST2 though the access window of case.

ST1 498247001 MAGNET BASE
ST2 498247100 DIAL GAUGE

NOTE:
- Measure the backlash by applying a pinion tooth between two bevel gear teeth.
- Fix the bevel pinion gear in place with a screwdriver or similar tool when measuring.

Standard:
0.13 — 0.18 mm (0.0051 — 0.0071 in)

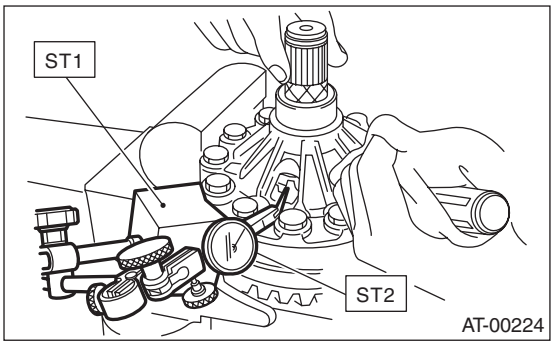

(3) If the backlash is out of specification, select a washer from the table below.

Washer	
Part No.	Thickness mm (in)
803038021	0.95 (0.037)
803038022	1.00 (0.039)
803038023	1.05 (0.041)

6) Using the ST, install the taper roller bearing.
ST 398437700 DRIFT

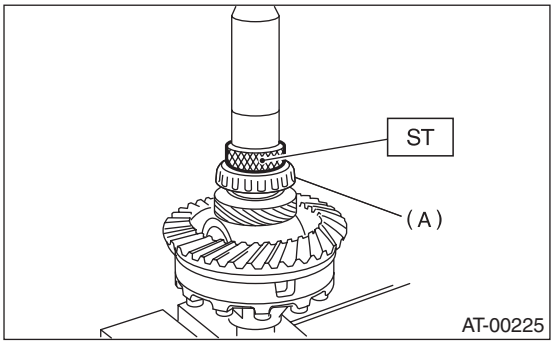

(A) Taper roller bearing

2. SIDE RETAINER

1) Install the bearing outer race to side retainer.
2) Install a new oil seal using the ST and a hammer.
ST 18675AA000 DIFFERENTIAL SIDE OIL SEAL INSTALLER

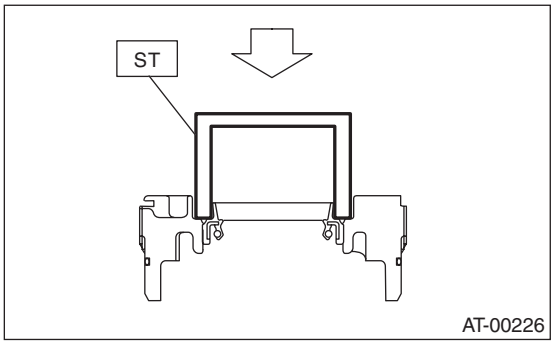

3) Apply gear oil to a new O-ring and install.

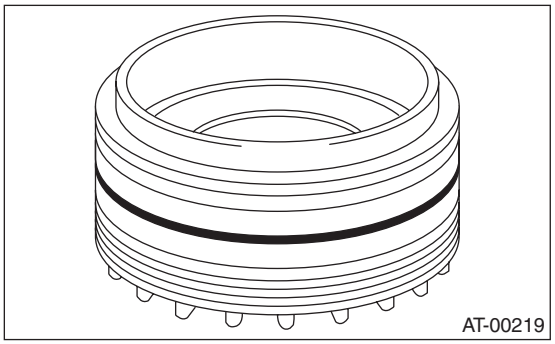

E: INSPECTION

- Check each component for scratches, damage or other faults.
- Measure the backlash, and then adjust it to be within specification. <Ref. to 4AT-106, ADJUSTMENT, Front Differential Assembly.>

F: ADJUSTMENT

1) Using the ST, screw-in the retainer until resistance is felt.

NOTE:
Screw in the RH side slightly deeper than the LH side.
ST 18630AA010 WRENCH COMPL RETAINER

NOTE:
- Screw in the RH side slightly deeper than the LH side.
- WRENCH ASSEMBLY (499787000) can also be used.

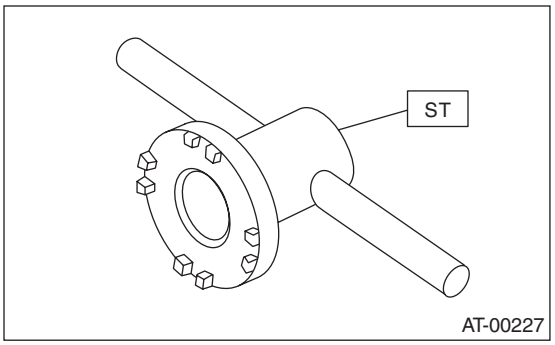

2) Remove the oil pump housing.
3) Remove the liquid gasket from the mating surface completely.
4) Install the oil pump housing assembly to the converter case, and secure them by tightening the four bolts evenly.

NOTE:
Use an old gasket or aluminum washer to prevent damaging the mating surface of the housing.

Tightening torque:
41 N·m (4.2 kgf-m, 30.2 ft-lb)

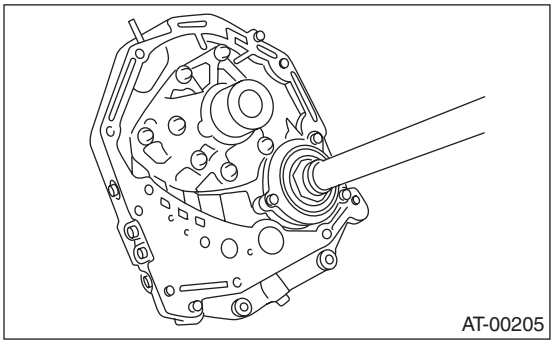

5) Rotate the drive pinion a few times using ST1 and ST2.

ST1 498937110 HOLDER
ST2 499787700 WRENCH

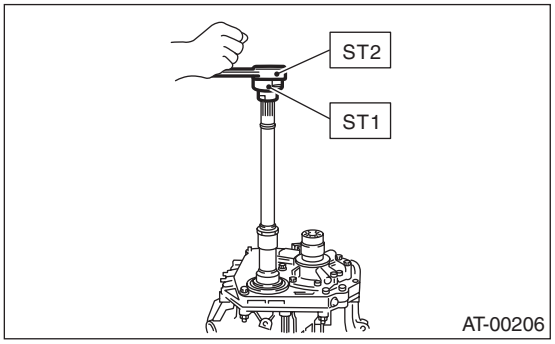

6) Tighten the LH retainer by rotating the shaft until resistance is felt. Then loosen the retainer RH. Keep tightening the retainer LH, and loosening the retainer RH until the pinion shaft no longer be turned. This is the “zero” state.

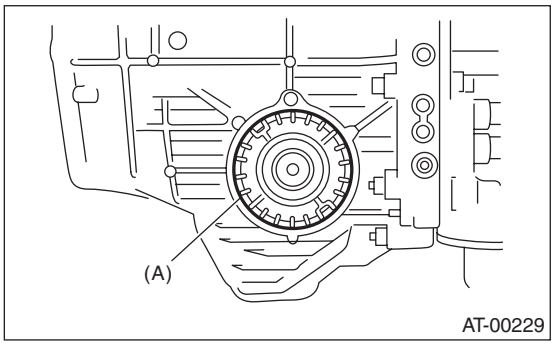

(A) Retainer

7) After the “zero” state is established, loosen the retainer LH by 3 notches and secure it with the lock plate. Then loosen the retainer RH and retighten until it stops. Rotate the drive pinion 2 or 3 times. Tighten the retainer RH further 1-3/4 notches. This sets the preload. Finally, secure the retainer with its lock plate.

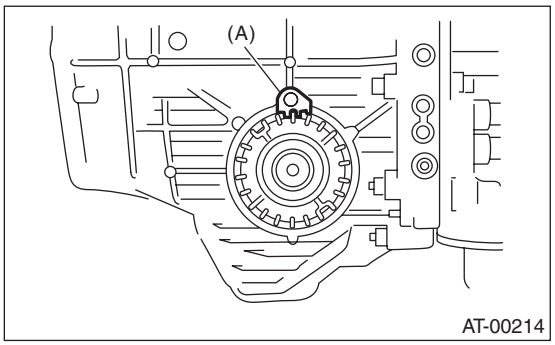

(A) Lock plate

NOTE:
Turning the retainer by one tooth changes the backlash approx. 0.05 mm (0.0020 in).

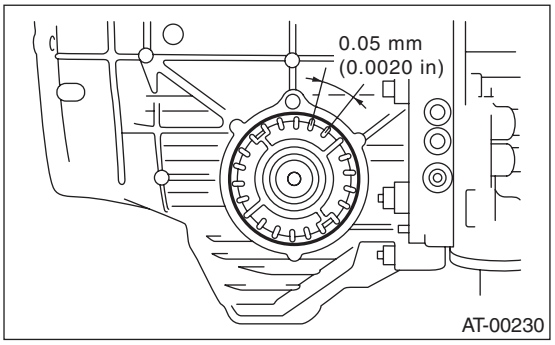

8) Turn the drive pinion a few times with ST1 and check to see if the backlash is within the specified value, using ST2, ST3, ST4 and ST5.

ST1 499787700 WRENCH
ST2 498247001 MAGNET BASE
ST3 498247100 DIAL GAUGE
ST4 499787500 ADAPTER
ST5 498255400 PLATE

Backlash:
0.13 — 0.18 mm (0.0051 — 0.0071 in)

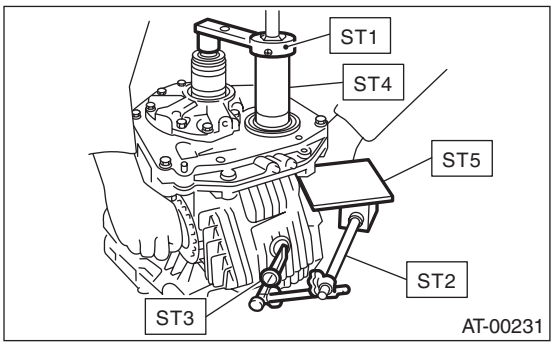

9) Adjust the teeth contact of the front differential and drive shaft. <Ref. to 4AT-99, ADJUSTMENT, Drive Pinion Shaft Assembly.>